EMBACO Rigid packaging Flexible solutions

Vial 15

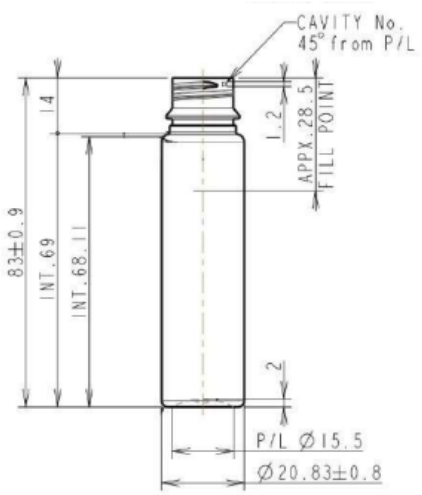

General info

Item no. (SKU):	**LS1122804116**
Family / Range:	**Vial**
Capacity:	**15ml**
Neck:	**18 ROPP**
Weight:	**6.9**
Shape:	**Round**
Material:	**PET**
Colour:	**All Colours Available**
Print Areas:	**N/A**
Country of Origin:	**Lithuania**

Packaging Info

Packed in Boxes

Box Dimensions (mm):	**594 x 394 x 448**
Quantity per box (pcs):	**1400**
Boxes per pallet (pcs):	**24**
Quantity per pallet (pcs):	**33600**
Net weight (kg):	**232**
Gross weight (kg):	**262**
Pallet height (mm):	**2400**

Packed in PE bags on trays

Tray dimensions (mm):	
Quantity per tray (pcs):	
Quantity per PE bag (pcs):	
PE bags per tray (pcs):	
Trays per pallet (pcs):	
Quantity per pallet (pcs):	
Net weight (kg):	
Gross weight (kg):	
Pallet height (mm):	

Food contact statement

We hereby confirm that this product complies with the requirements of the european ligislation (EU) no 10/2011 and all its amendments for plastics used in contact with food

Storage

Please be aware that these products are handled and stored correctly in order to ensure the safety and quality of out products. when storing this product, please avoid excessive force and storage above 40 degrees celcius (86 degrees fahrenheit)